## Dimension drawing

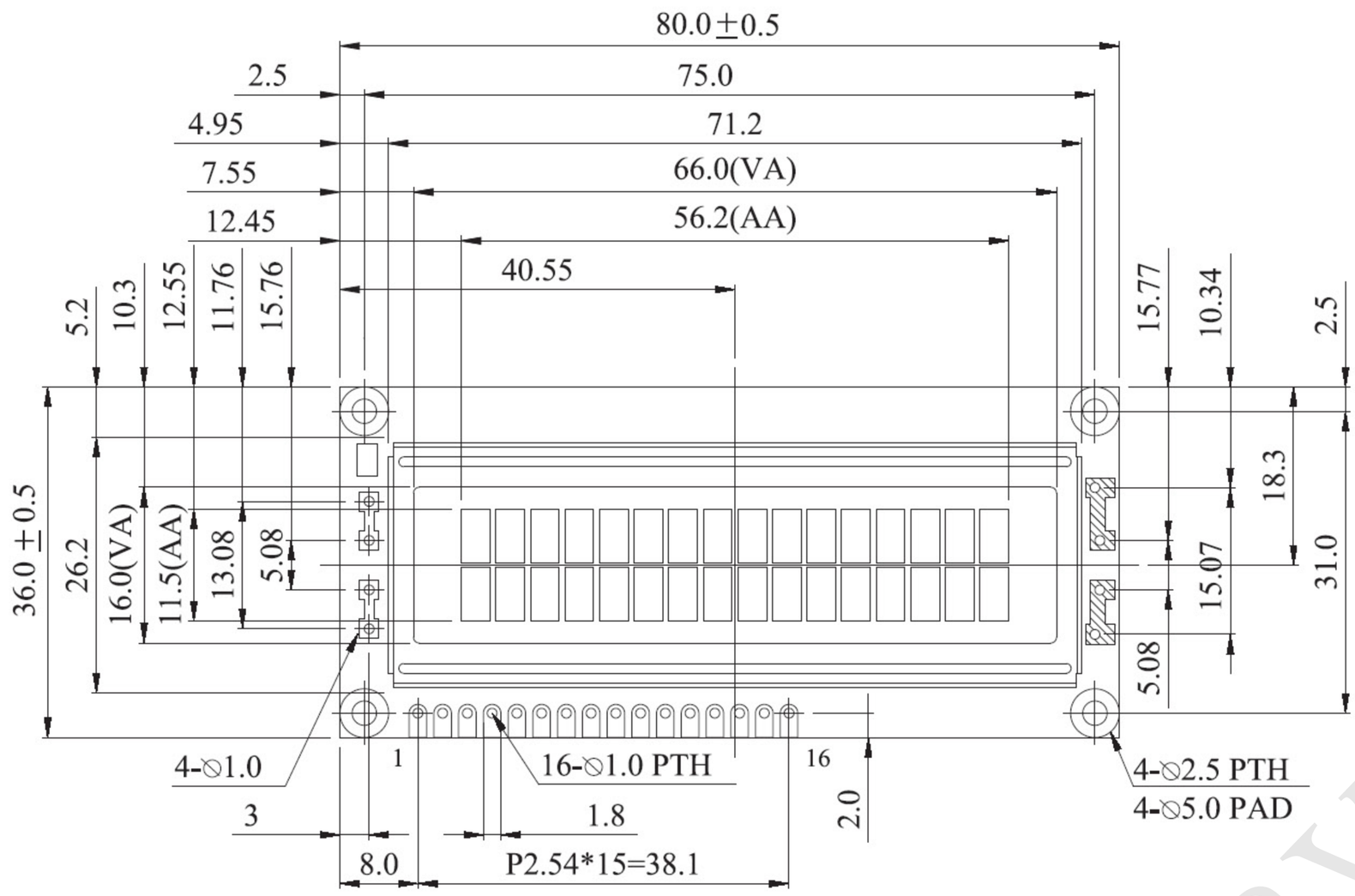


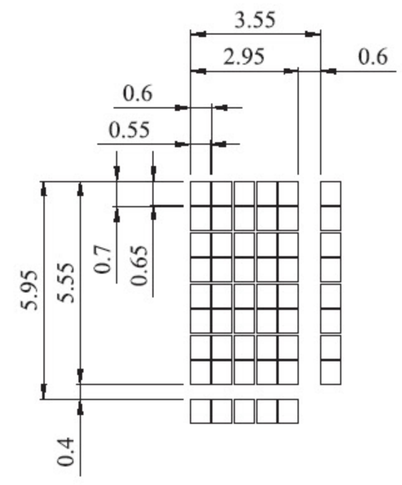


DOT SIZE
SCALE 5/1

LED-H/L B/L

| | High | Low |
|---|---|---|
| H1 | 13.2 | 12.1 |
| H2 | 8.6 | 7.5 |

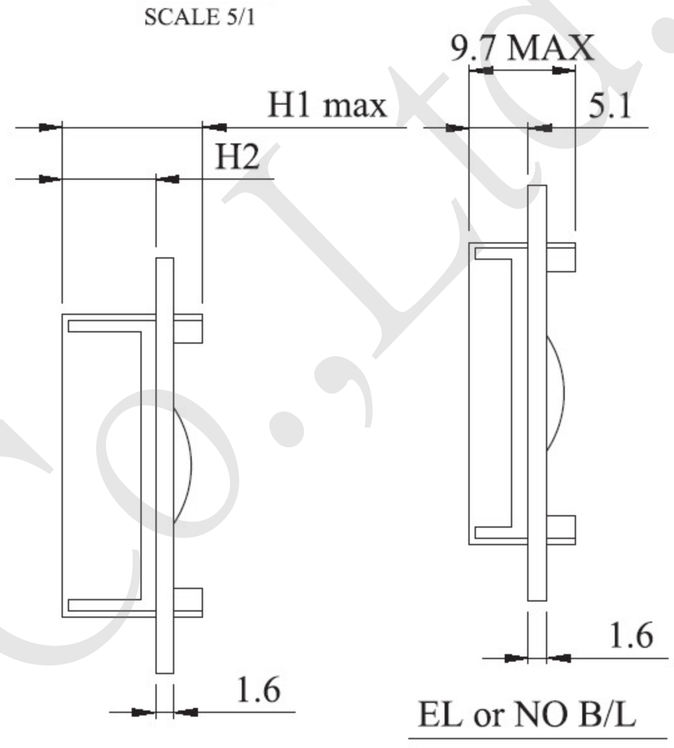


## Feature

1. 5x8 dots includes cursor
2. Built-in controller (KS 0066 or Equivalent)
3. +5V power supply (Also available for +3V)
4. 1/16 duty cycle
5. LED can be driven by pin1,pin2,pin15,pin16 or A and K
6. N.V. optional for +3V power supply

| Pin NO. | Symbol | Function |
|---|---|---|
| 1 | Vss | GND |
| 2 | Vdd | +3V or + 5V |
| 3 | Vo | Contrast Adjustment |
| 4 | RS | H/L Register select signal |
| 5 | R/$\overline{W}$ | H/L Read / write signal |
| 6 | E | H→L Enable signal |
| 7 | DB0 | H/L Data bus line |
| 8 | DB1 | H/L Data bus line |
| 9 | DB2 | H/L Data bus line |
| 10 | DB3 | H/L Data bus line |
| 11 | DB4 | H/L Data bus line |
| 12 | DB5 | H/L Data bus line |
| 13 | DB6 | H/L Data bus line |
| 14 | DB7 | H/L Data bus line |
| 15 | A/Vee | +4.2V for LED(RA=0Ω)/Negative Voltage output |
| 16 | K | Power supply for B/L (0V) |

## Mechanical Data

| Item | Standard Value | Unit |
|---|---|---|
| Module Dimension | 80.0x36.0 | mm |
| Viewing Area | 66.0x16.0 | mm |
| Mounting hole | 75.0x31.0 | mm |
| Character Size | 2.95x5.55 | mm |

## Absolute Maximum Rating

| Item | Symbol | Standard Value | | | Unit |
|---|---|---|---|---|---|
| | | min. | typ. | max. | |
| Power Supply | VDD-VSS | -0.3 | --- | 7.0 | V |
| Input Voltage | VI | -0.3 | --- | VDD | V |

Note：VSS=0 Volt, VDD=5.0 Volt.

## Electronical Characteristics

| Item | Symbol | Condition | | Standard Value | | | Unit |
|---|---|---|---|---|---|---|---|
| | | | | min. | typ. | max. | |
| Input Voltage | VDD | VDD=+5V | | 4.7 | 5.0 | 5.3 | V |
| Supply Current | IDD | VDD=5V | | --- | 1.2 | 1.5 | mA |
| Recommended LC Driving Voltage for Normal Temp. Version module | VDD-V0 | -20°C | | --- | --- | 5.2 | V |
| | | 0°C | | --- | --- | 4.2 | |
| | | 25°C | | --- | 3.8 | --- | |
| | | 50°C | | 3.5 | --- | --- | |
| | | 70°C | | 3.2 | --- | --- | |
| LED Forward Voltage | VF | 25°C | | --- | 4.2 | 4.6 | V |
| LED Forward Current | IF | 25°C | Array | --- | 130 | 260 | mA |
| | | | Edge | --- | 20 | 40 | |
| EL Power Supply Current | IEL | Vel=110VAC;400Hz | | --- | --- | 5.0 | mA |

## Display Character Address Code：

| Display position | 1 | 2 | 3 | 4 | 5 | 6 | 7 | 8 | 9 | 10 | 11 | 12 | 13 | 14 | 15 | 16 |
|---|---|---|---|---|---|---|---|---|---|---|---|---|---|---|---|---|
| DD RAM Address | 00 | 01 | | | | | | | | | | | | | | 0F |
| DD RAM Address | 40 | 41 | | | | | | | | | | | | | | 4F |

WINSTAR Display Co.,Ltd.